Table Of Contents

1. IO list 2
2. Scenario for HRV 3
2.1. M1 – Standard 3
2.2. M2 – Electrical Heater 4
2.3. M3 – Water Battery 5
2.4. M4 – Heat Pump 6
2.5. M5 – VRF Master 7
2.6. M6 – VRF Slave 8
3. Scenario for AHU 9
4. Scenario for FCU 9
5. Scenario for VAV 9
6. Environmental equipment 9
6.1. Extension IO Module 9
6.2. Differential Pressure Module 9
6.3. Cable Type Active Sensor 9
6.4. Cable Type Passive Sensor 9
6.5. Electrical Heater Driver Module 9

1. IO list

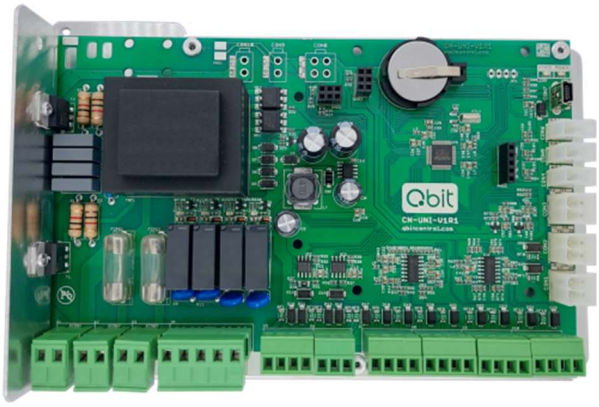

OUTPUTS				INPUTS		
Power Input (220V AC 50/60Hz)	N	1	CN-UNI-V1R1-V3.1	27	UI1	Universal Inputs (Contact, 0-10V, NTC10K)
	L	2		28	GND	
				29	UI2	
Triac Outputs (220V AC)	TO1	3		30	GND	
		4		31	UI3	
	TO2	5		32	GND	
		6		33	UI4	
				34	GND	
Digital Outputs (Dry Contact)	DO3	7		35	+5V	Electrical After Heater Module or IO.
	DO4	8		36	GND	
	DO5	9		37	UI8	
	DO6	10		38	DI1	
	DCM	11		39	+5V	Electrical Pre Heater-Module or IO.
				40	GND	
Room Panel	W	12		41	UI9	
	X	13		42	DI2	
	Y	14		43	+5V	Cable Type Active Sensor Module
	Z	15		44	GND	
				45	SCL	
BMS Connection (RS485 Modbus RTU)	GND	16		46	SDA	
	A	17		47	GND	Cable Type Passive Sensors or IO
	B	18		48	UI5	
				49	GND	
Analog Outputs (0-10V)	AO7	19		50	UI6	
	GND	20		51	GND	
	AO8	21		52	UI7	
	GND	22		53	+5V	Service Module
	AO9	23		54	GND	
	GND	24		55	SCL	
	AO10	25		56	SDA	
	GND	26		-	SHD1	Pressure Sensor Mdl.
				-	SHD2	Extension IO Module

2. Scenario for HRV

2.1. M1 – Standard

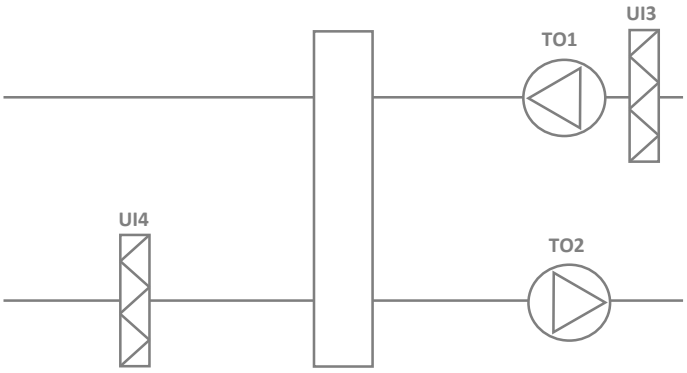

OUTPUTS				INPUTS		
Power Input	N	1	CN-UNI-V1R1-V3.1	27	UI1	-
	L	2		28	GND	
				29	UI2	-
ASP Fan Level Output	TO1	3		30	GND	
		4		31	UI3	Filter ASP
VNT Fan Level Output	TO2	5		32	GND	
		6		33	UI4	Filter VNT
				34	GND	
-	DO3	7		35	+5V	-
-	DO4	8		36	GND	
-	DO5	9		37	UI8	
Working State	DO6	10		38	DI1	
Common	DCM	11		39	+5V	-
				40	GND	
Room Panel	W	12		41	UI9	
	X	13		42	DI2	
	Y	14		43	+5V	-
	Z	15		44	GND	
				45	SCL	
BMS Connection	GND	16		46	SDA	
	A	17		47	GND	-
	B	18		48	UI5	
				49	GND	-
-	AO7	19		50	UI6	
	GND	20		51	GND	-
-	AO8	21		52	UI7	
	GND	22		53	+5V	-
-	AO9	23		54	GND	
	GND	24		55	SCL	
-	AO10	25		56	SDA	
	GND	26		-	SHD1	-
				-	SHD2	-

2.2. M2 – Electrical Heater

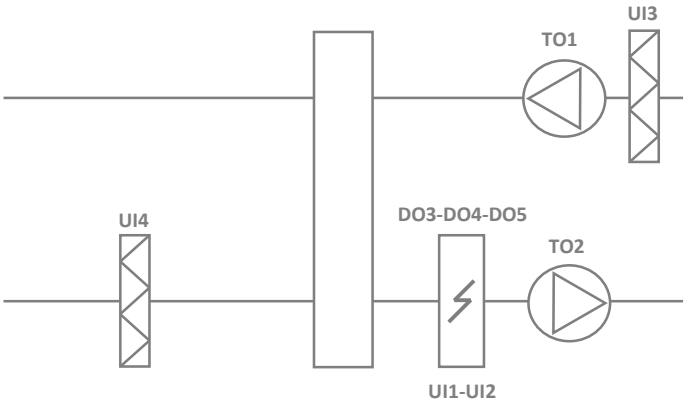

OUTPUTS				INPUTS		
Power Input	N	1	CN-UNI-V1R1-V3.1	27	UI1	E. Heater Thermic Alarm
	L	2		28	GND	
				29	UI2	E. Heater Limit Warning
ASP Fan Level Output	TO1	3		30	GND	
		4		31	UI3	Filter ASP
VNT Fan Level Output	TO2	5		32	GND	
		6		33	UI4	Filter VNT
				34	GND	
E. Heater Level 1	DO3	7		35	+5V	-
E. Heater Level 2	DO4	8		36	GND	
E. Heater Level 3	DO5	9		37	UI8	
Working State	DO6	10		38	DI1	
Common	DCM	11		39	+5V	-
				40	GND	
Room Panel	W	12		41	UI9	
	X	13		42	DI2	
	Y	14		43	+5V	-
	Z	15		44	GND	
				45	SCL	
BMS Connection	GND	16		46	SDA	
	A	17		47	GND	-
	B	18		48	UI5	
				49	GND	-
-	AO7	19		50	UI6	
	GND	20		51	GND	-
-	AO8	21		52	UI7	
	GND	22		53	+5V	-
-	AO9	23		54	GND	
	GND	24		55	SCL	
-	AO10	25		56	SDA	
	GND	26		-	SHD1	-
				-	SHD2	-

2.3. M3 – Water Battery

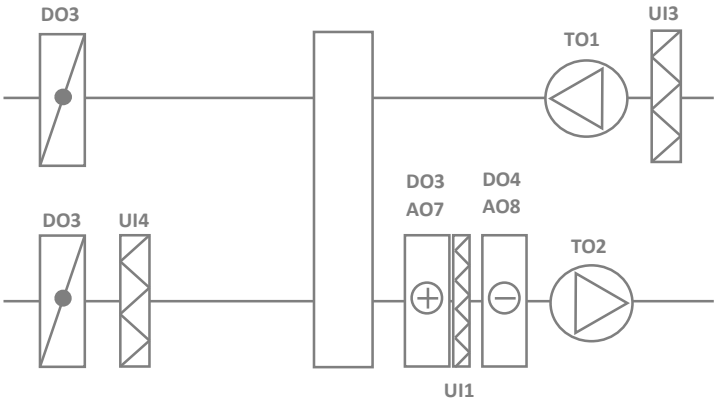

OUTPUTS				INPUTS		
Power Input	N	1	CN-UNI-V1R1-V3.1	27	UI1	Water Battery Frost Alarm
	L	2		28	GND	
				29	UI2	-
ASP Fan Level Output	TO1	3		30	GND	
		4		31	UI3	Filter ASP
VNT Fan Level Output	TO2	5		32	GND	
		6		33	UI4	Filter VNT
				34	GND	
Heater ON/OFF	DO3	7		35	+5V	-
Cooler ON/OFF	DO4	8		36	GND	
Air Damper	DO5	9		37	UI8	
Working State	DO6	10		38	DI1	
Common	DCM	11		39	+5V	-
				40	GND	
Room Panel	W	12		41	UI9	
	X	13		42	DI2	
	Y	14		43	+5V	-
	Z	15		44	GND	
				45	SCL	
BMS Connection	GND	16		46	SDA	
	A	17		47	GND	-
	B	18		48	UI5	
				49	GND	-
Heater Ratio	AO7	19		50	UI6	
	GND	20		51	GND	-
Cooler Ratio	AO8	21		52	UI7	
	GND	22		53	+5V	-
-	AO9	23		54	GND	
	GND	24		55	SCL	
-	AO10	25		56	SDA	
	GND	26		-	SHD1	-
				-	SHD2	-

2.4. M4 – Heat Pump

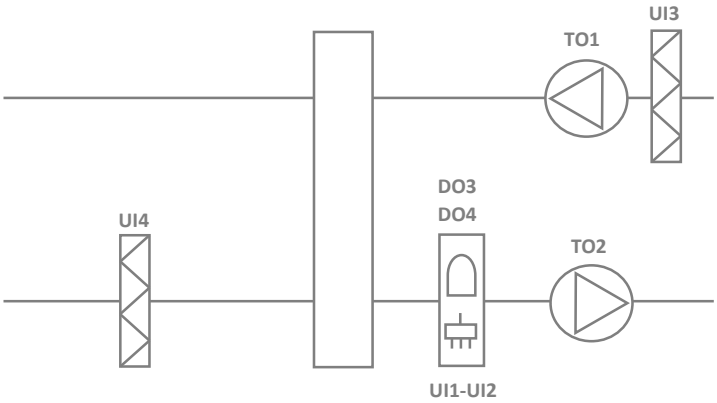

OUTPUTS				INPUTS		
Power Input	N	1	CN-UNI-V1R1-V3.1	27	UI1	Pressure High
	L	2		28	GND	
				29	UI2	Pressure Low
ASP Fan Level Output	TO1	3		30	GND	
		4		31	UI3	Filter ASP
VNT Fan Level Output	TO2	5		32	GND	
		6		33	UI4	Filter VNT
				34	GND	
Compressor	DO3	7		35	+5V	-
4 Way Valve	DO4	8		36	GND	
-	DO5	9		37	UI8	
Working State	DO6	10		38	DI1	
Common	DCM	11		39	+5V	-
				40	GND	
Room Panel	W	12		41	UI9	
	X	13		42	DI2	
	Y	14		43	+5V	-
	Z	15		44	GND	
				45	SCL	
BMS Connection	GND	16		46	SDA	
	A	17		47	GND	-
	B	18		48	UI5	
				49	GND	-
-	AO7	19		50	UI6	
	GND	20		51	GND	-
-	AO8	21		52	UI7	
	GND	22		53	+5V	-
-	AO9	23		54	GND	
	GND	24		55	SCL	
-	AO10	25		56	SDA	
	GND	26		-	SHD1	-
				-	SHD2	-

2.5. M5 – VRF Master

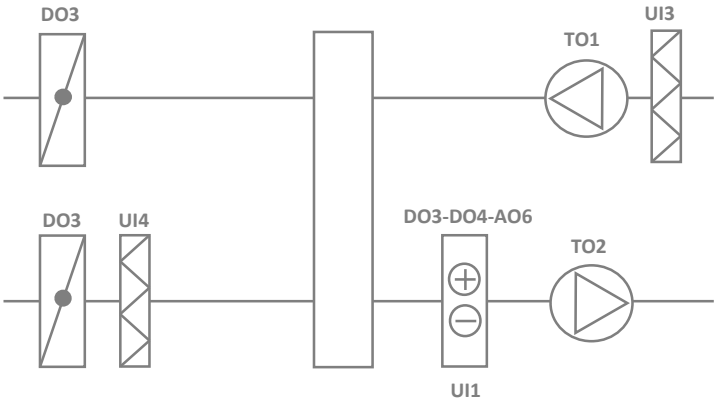

OUTPUTS				INPUTS		
Power Input	N	1	CN-UNI-V1R1-V3.1	27	UI1	VRF Defrost Alarm
	L	2		28	GND	
				29	UI2	-
ASP Fan Level Output	TO1	3		30	GND	
		4		31	UI3	Filter ASP
VNT Fan Level Output	TO2	5		32	GND	
		6		33	UI4	Filter VNT
				34	GND	
Heater ON/OFF	DO3	7		35	+5V	-
Cooler ON/OFF	DO4	8		36	GND	
Air Damper	DO5	9		37	UI8	
Working State	DO6	10		38	DI1	
Common	DCM	11		39	+5V	-
				40	GND	
Room Panel	W	12		41	UI9	
	X	13		42	DI2	
	Y	14		43	+5V	-
	Z	15		44	GND	
				45	SCL	
BMS Connection	GND	16		46	SDA	
	A	17		47	GND	-
	B	18		48	UI5	
				49	GND	-
Climate Ratio	AO7	19		50	UI6	
	GND	20		51	GND	-
-	AO8	21		52	UI7	
	GND	22		53	+5V	-
-	AO9	23		54	GND	
	GND	24		55	SCL	
-	AO10	25		56	SDA	
	GND	26		-	SHD1	-
				-	SHD2	-

2.6. M6 – VRF Slave

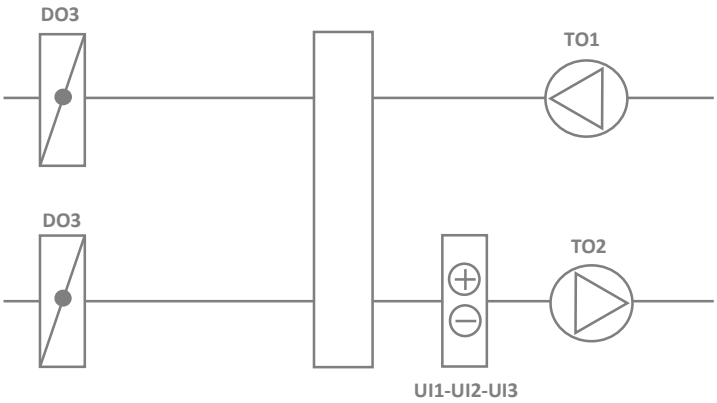

OUTPUTS				INPUTS		
Power Input	N	1	CN-UNI-V1R1-V3.1	27	UI1	Fan Level Low
	L	2		28	GND	
				29	UI2	Fan Level Medium
ASP Fan Level Output	TO1	3		30	GND	
		4		31	UI3	Fan Level High
VNT Fan Level Output	TO2	5		32	GND	
		6		33	UI4	
				34	GND	
-	DO3	7		35	+5V	-
-	DO4	8		36	GND	
Air Damper	DO5	9		37	UI8	
Working State	DO6	10		38	DI1	
Common	DCM	11		39	+5V	-
				40	GND	
Room Panel	W	12		41	UI9	
	X	13		42	DI2	
	Y	14		43	+5V	-
	Z	15		44	GND	
				45	SCL	
BMS Connection	GND	16		46	SDA	
	A	17		47	GND	-
	B	18		48	UI5	
				49	GND	-
-	AO7	19		50	UI6	
	GND	20		51	GND	-
-	AO8	21		52	UI7	
	GND	22		53	+5V	-
-	AO9	23		54	GND	
	GND	24		55	SCL	
-	AO10	25		56	SDA	
	GND	26		-	SHD1	-
				-	SHD2	-